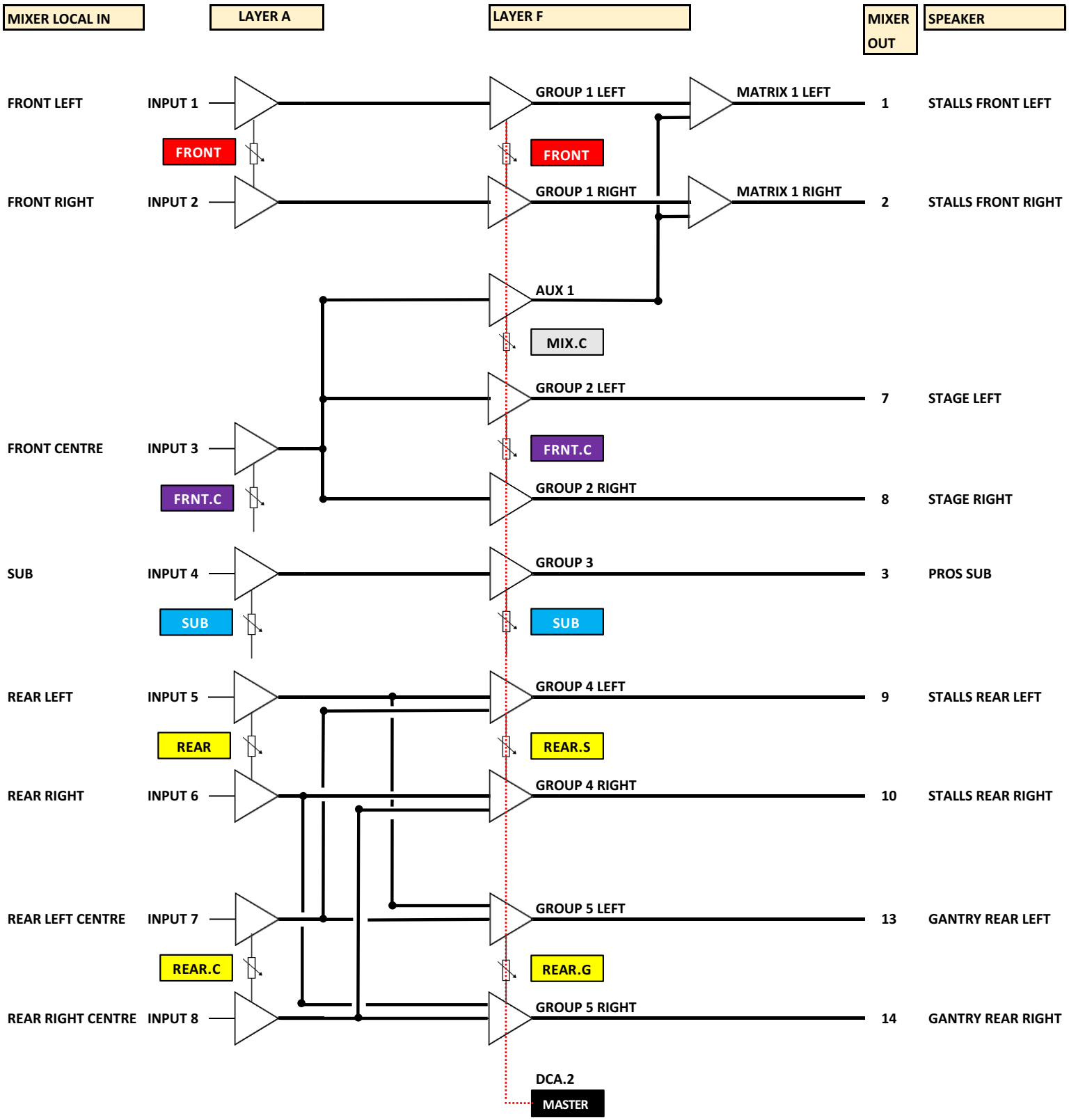SURROUND SCHEMATIC VERS.1